1/2" Bleed

1/2" Hidden

Halo Rail

Document Size: Finished Size + 1/2" bleed on each of 4 sides

@100 DPI recommended

Applicable for:

Model #: Finished Size

HRSS6 (72" Diameter)**:** W=223.725" x H

HRSS8 (96" Diameter)**:** W=299.085" x H

HRSS10 (120" Diameter)**:** W= 374.445" x H

HRSS12 (144" Diameter)**:** W= 449.805" x H

Custom HRSS: **W** = (Diameter – 0.75") x 3.14 **H** = Overall Height – 2.5"

(includes hardware)

Minus Minus

File Specs:

- CMYK
- 100 DPI @ Final Size
- Convert all fonts to outlines
- Provide all linked files
- Provide any critical PMS colors
- 1/2" Bleed on each of 4 sides
- Extend background to full bleed

Bleed Area

Finished Size

Hidden Area

Styrene Graphic Hole Spec.

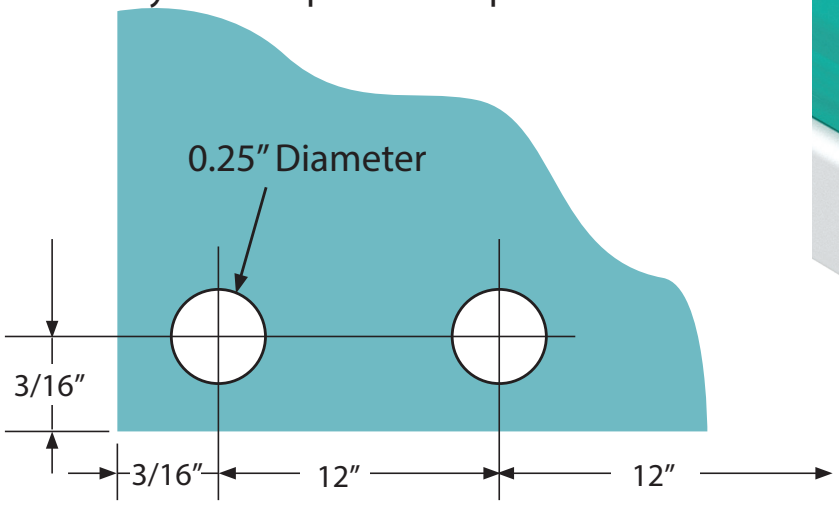

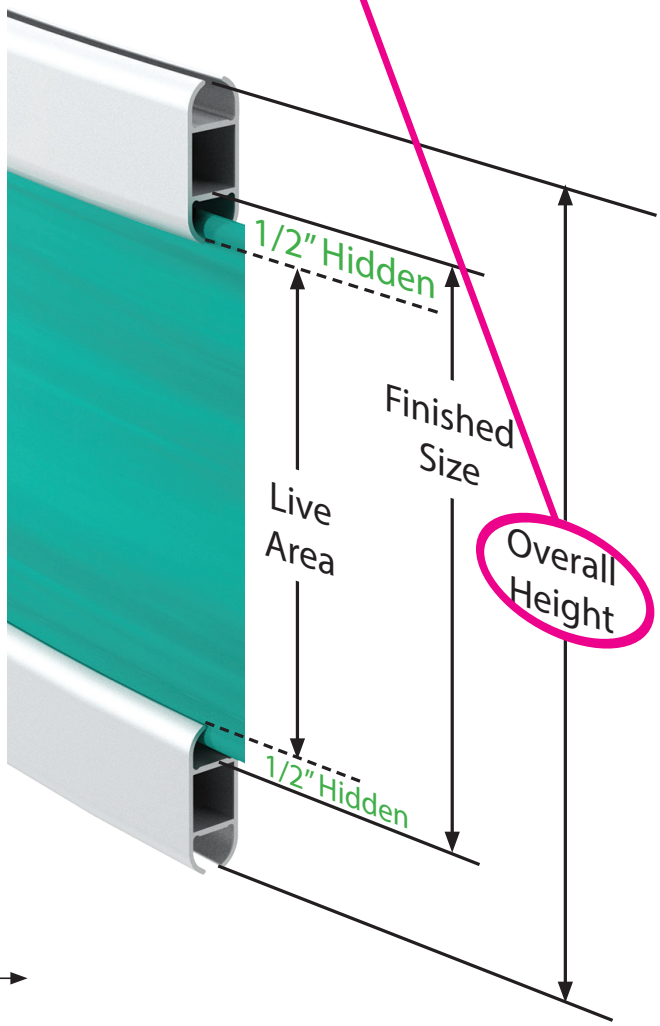

(NOT TO SCALE)

1/2" Hidden

File Version: 2

1/2" Bleed

1/2" Bleed

1/2" Bleed